ALLEN&HEATH

ZEDi-10/10FX



ZEDi10 ZEDi10FX

SERVICE MANUAL

ISSUE 1.2

DISTRIBUTOR USE ONLY

Copyright © 2022 Allen & Heath. All rights reserved.

ALLEN&HEATH

Allen & Heath Limited, Kernick Industrial Estate, Penryn, Cornwall, TR10 9LU, UK

https://www.allen-heath.com

Contents

Notices 2
Legal Notice 2
Servicing precautions – General Notes 2
Parts Identification 4
Parts List 4
Circuit Board Layout 9
Circuit Board Identification 10
Servicing Information 12
Hot Melt Glue 12
Jumper Assignments 12
RECN5204A 004-851 PSU V2 Component value changes 13
PSU Circuit Diagram 14
Other Technical Information 14
Block Diagram 15
Specifications 15
Weights & Dimensions 15

Notices

Legal Notice

Allen & Heath retains ownership of all intellectual property in this document.
The information and materials presented in this document are provided as an information source only. While every effort has been made to ensure the accuracy and completeness of the information, no guarantee is given, nor responsibility taken by Allen & Heath for errors or omissions in the data.
Allen & Heath is not liable for any loss or damage that may be suffered or incurred in any way as a result of acting on information in this document. The information is provided solely on the basis that readers will be responsible for making their own assessment regarding servicing requirements.

Servicing precautions – General Notes

Service Personnel: Service work should be carried out by technically qualified personnel only. Mains power is dangerous and can kill. Do not attempt to work on a linear or switched mode power supply if you are not suitably qualified to do so. Do not attempt to repair surface mount circuit assemblies unless you are suitably qualified and have the necessary facilities to do so. Replacement circuit assemblies can be ordered.

Service Facilities: Ensure a suitably sized worksurface is available. Ensure this is clear of dirt, debris and obstructions which may damage the equipment surfaces. Ensure adequate lighting. Use the correct tools for the job and ensure that they are in good working order. Ensure all workshop safety requirements are adhered to.

Safety Information: Failure to follow the appropriate service and safety procedures may result in personal injury. You must read and adhere to the Safety instructions available in the box with the finished goods or available to service centres via your Asset Library login.

Service information: Check that you have all the information you need before starting the service job. Refer to the Allen & Heath website for user facing information such as firmware guides (including block diagrams), weights and dimensions and Technical Spec Data Sheets at www.allen-heath.com. For any other information contact Allen & Heath Product Support at https://support.allen-heath.com.

Saving Data: In order to preserve the customer data, you should save any console data onto two separate USB devices if applicable.

Mains Power: Connect the equipment to mains power only of the type described in the user guide and marked on the rear panel. The power source must provide a good ground connection. Ensure you always use an isolation transformer when working on any mains power supply unit.

Mains Cord and Fuse: Use the correct power cord as supplied with the equipment. Do not remove or tamper with the ground connection in the power cord. Heed the important mains plug wiring instructions in the Safety Instructions sheet. Always replace the equipment mains fuse with the correct type and rating as marked on the equipment panel.

Static Discharge: Static discharges can destroy expensive components. Discharge any static electricity your body may have accumulated before commencing servicing.

Opening the unit: Switch off and remove the mains power cord before opening the equipment. Ensure all power supply covers and safety shields are in place before applying power with the unit open for diagnostic fault finding.

Fault finding: In-warranty faults should be corrected by board swapping. If attempting an out of warranty repair at a component level, replace suspected faulty components only with those specified by Allen & Heath. The use of lower grade alternatives may degrade the performance or risk damage to the equipment.

Closing the unit: Before finishing, check the quality and accuracy of the service work carried out. Remove any dirt or debris as this may cause equipment failure in the future. Ensure all assemblies, harnesses and connectors are correctly aligned, plugged in and cable tied. Ensure that jumper settings and control configurations are correctly set according to the requirements of the customer.

Testing the unit: Before operating the equipment, read and adhere to the Safety Instructions for the unit. Test that the service work has been successfully carried out.

Shipping the unit: Use adequate packing such as the original packaging or purpose designed flight case if you need to ship the unit. To avoid injury to yourself or damage to the equipment take care when lifting, moving or carrying the equipment.

Important: Information provided is believed to be accurate, but research is ongoing, and improvements or changes can be made to the unit without notice. If you have any questions, please contact Product Support at https://support.allen-heath.com.

Battery Handling: **Batteries can explode with improper handling. Follow the following precautions if a battery is fitted to this product.**

- Battery replacement should be performed by qualified service personnel.
- Always replace with batteries of the same type.
- When installing on the PCB by soldering, solder using the connection terminals provided on the battery cells.
- Never solder directly onto the cells. Perform soldering as quickly as possible.
- Never reverse the battery polarity when installing.
- Do not short the batteries.
- Do not attempt to recharge batteries.
- Do not disassemble the batteries.
- Never heat batteries or throw them into fire.

Parts Identification

Parts List

Chassis

Part Number	Description	i10	i10FX
004-1256X	CHASS. ZI-10 PLASTIC + FEET	1	1
AA10064	FRONT PNL ZI-10FX	-	1
AA10065	FRONT PNL ZI-10	1	-
AA10110-L-OV	OVERLAY S/ADH ZI-10 LEFT	1	1
AA10110-R-OV	OVERLAY S/ADH ZI-10 RIGHT	1	1
AA9972	FACIA 7 SEG DISPLAY ZED	-	1
AL8923	SW.MAINS ROCK.H8600VBAAA	1	1
AN10143	LABEL ZEDI-10	1	-
AN10144	LABEL ZEDI-10FX	-	1
AK12035	FEET RUBBER 16DIA.X0.5MM	4	4

Screws

Part Number	Description	i10	i10FX
AB0072	SCREW M3X6 PAN TORX BK PA	2	2
AB0073	SCREW M3X8 PAN TORX BK	1	1
AB0102	NUT M3 NYLOCK	1	1
AB10052	SCREW M3X1.5 10MM DOME TO	10	10
AB2809	SCREW 6BX5/16 PAN TORX BK	2	2
AB7422	SCREW 2.7X9 AB TORX BK UH	13	13
AB7611	SCREW M2X3 CSK POZI BK	2	2
AB8050	NUT POT 9MM SILVER	46	46

Cables & Msc

Part Number	Description	i10	i10FX
AL10150	WFM IDC ZI-10 MAIN	1	1
AL10151	WFM IDC ZI-10 MASTER	1	1
AL10154	WFM IDC ZI-10 MIX	1	1

PCB

Part Number	Description	i10	i10FX
004-688-1	PCBA ZI-10 MONO I/P #1 IN **(M1)** (AG10104)	1	1
004-688-2	PCBA ZI-10 MONO I/P #2 IN **(M2)** (AG10104)	1	1
004-689	PCBA ZI-10 STEREO INPUT	1	1
004-690	PCBA ZI-10FX EFFECTS	-	1
004-691	PCBA ZI-10 USB	1	1
004-692	PCBA ZI-10 AUX MASTER	1	1
004-693	PCBA ZI-10 MASTER	1	1
004-695	PCBA ZI-10 RETURN	1	-
004-704-1	PCBA ZI-10 MONO I/P #1 LI **(M3)** (AG10180)	1	1
004-704-2	PCBA ZI-10 MONO I/P #2 LI **(M4)** (AG10180)	1	1
004-851	PCBA ZI-10 PSU V2 (2OZ CU	1	1
AI3661	FDR 60MM 10KAX2 DUST	1	1

Other

Part Number	Description	i10	i10FX
AJ10128	KNOB 11MM BK-RD	15	15
AJ10129	KNOB 11MM BK-BL	14	14
AJ10132	KNOB 11MM BK-L/GY	7	7
AJ10133	KNOB 11MM BK-YEL	5	5
AJ10194	KNOB 11MM BK-OR	5	5
AJ10195	KNOB FDR 11MM RD-BK	1	1
AJ6379	KNOB ENC.SOFT BK	-	1
AJ7210	PUSH BTN SQ GRY 5.5MM	19	20
AJ7211	PUSH BTN SQ WHT 5.5MM	4	4

Accessories

Part Number	Description	i10	i10FX
AH8752	CABLE USB A-B 2M FERR	1	1
AN10146	BOX+FIT ZI-10FX	-	1
AN10148	BOX+FIT ZI-10	1	-

Knobs & caps

AJ10128
Red Knb

AJ10129
Blue Knb

AJ10132
Grey Knb

AJ10133
Yell Knb

AJ10194
Org Knb



AJ7211
Wht Btn

AJ7210
Gry Btn

AA9972
Facia

AJ6379
Enc Knb

AJ10195
FDR Knb

Pots, sockets & Switches

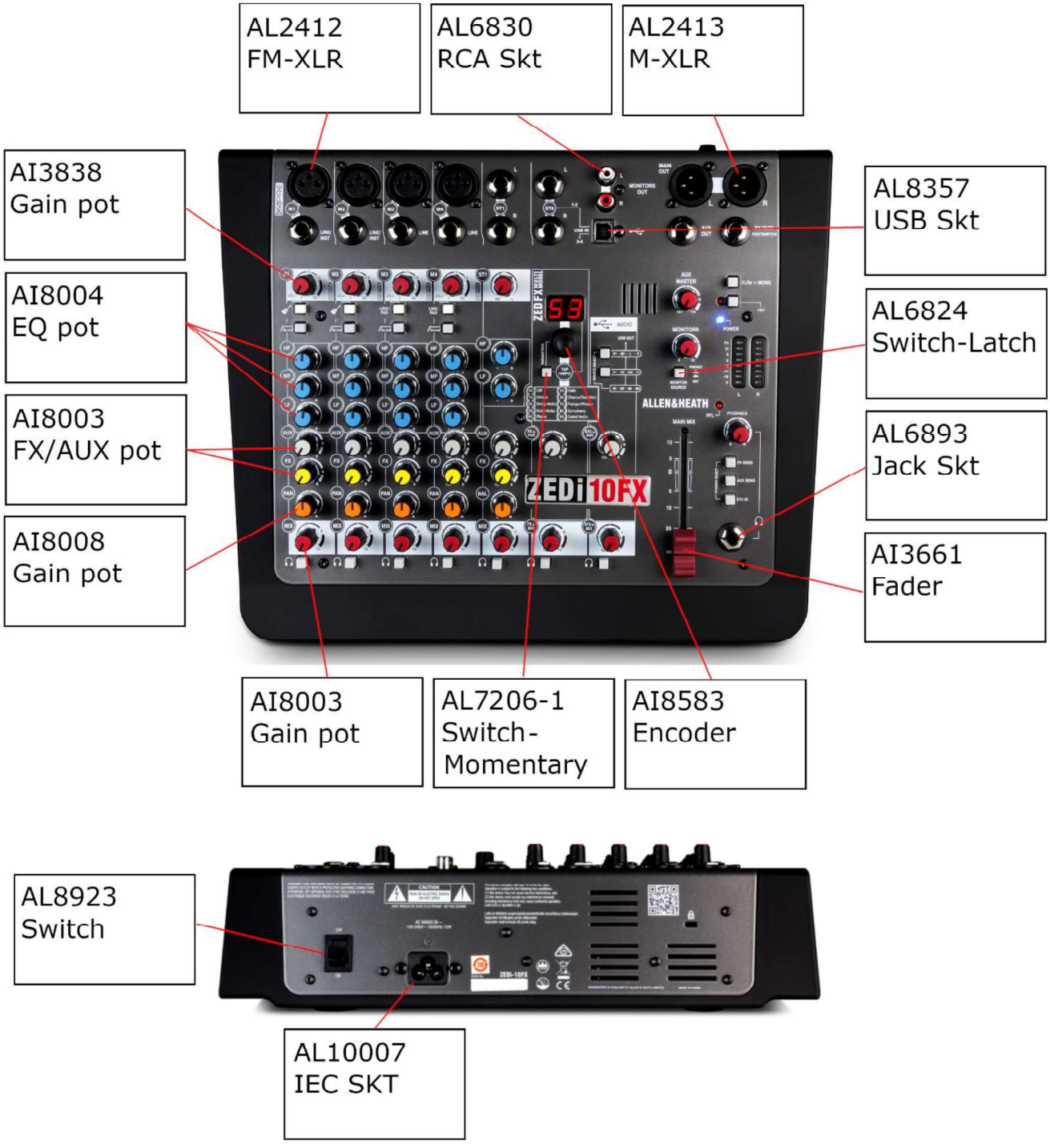

Screws

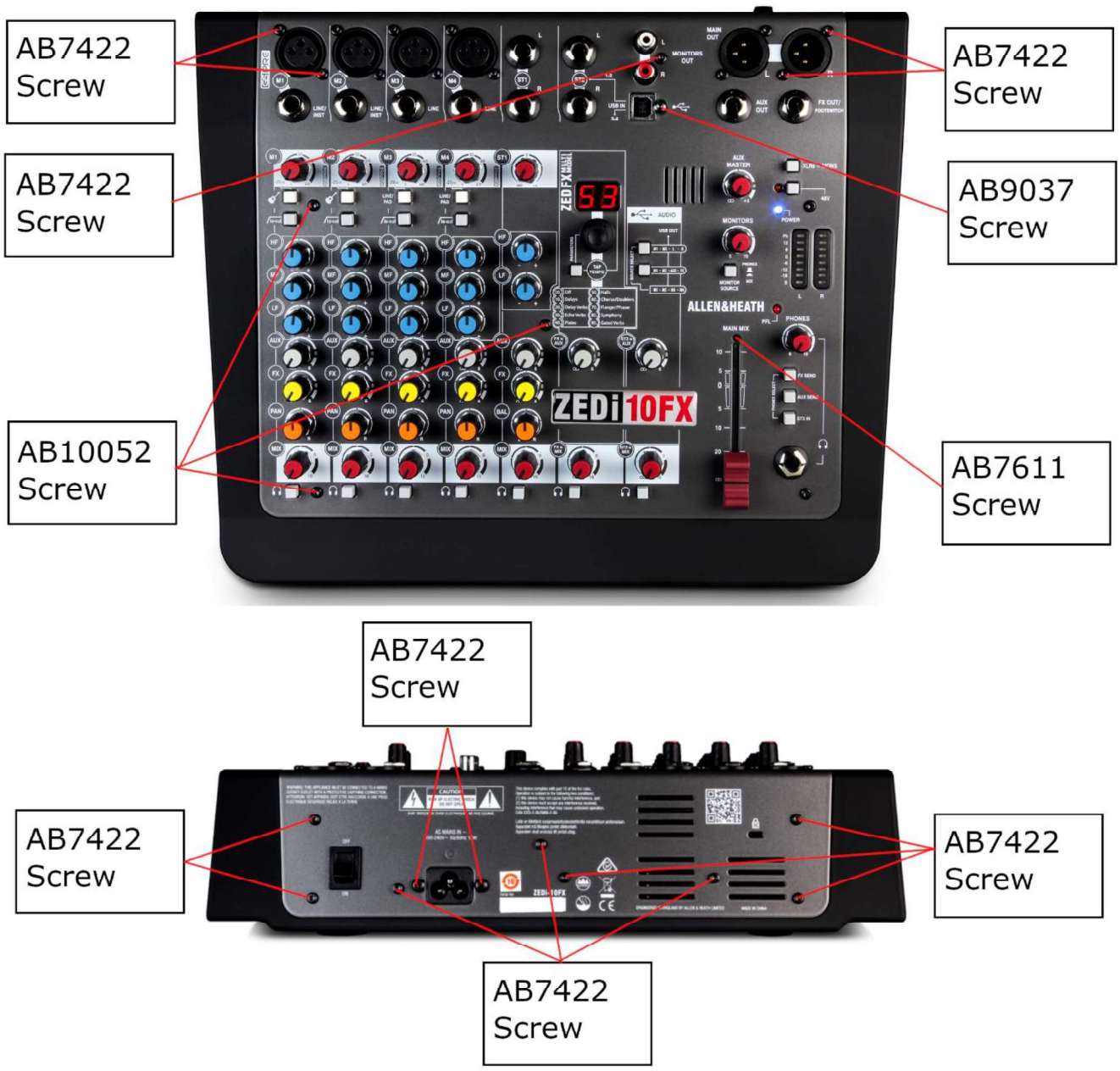
AB7422 Screw
AB7422 Screw
AB10052 Screw
AB7422 Screw
AB7422 Screw
AB9037 Screw
AB7611 Screw
AB7422 Screw
AB7422 Screw
AB7422 Screw
ZEDi10FX
ALLEN&HEATH

Circuit Board Layout

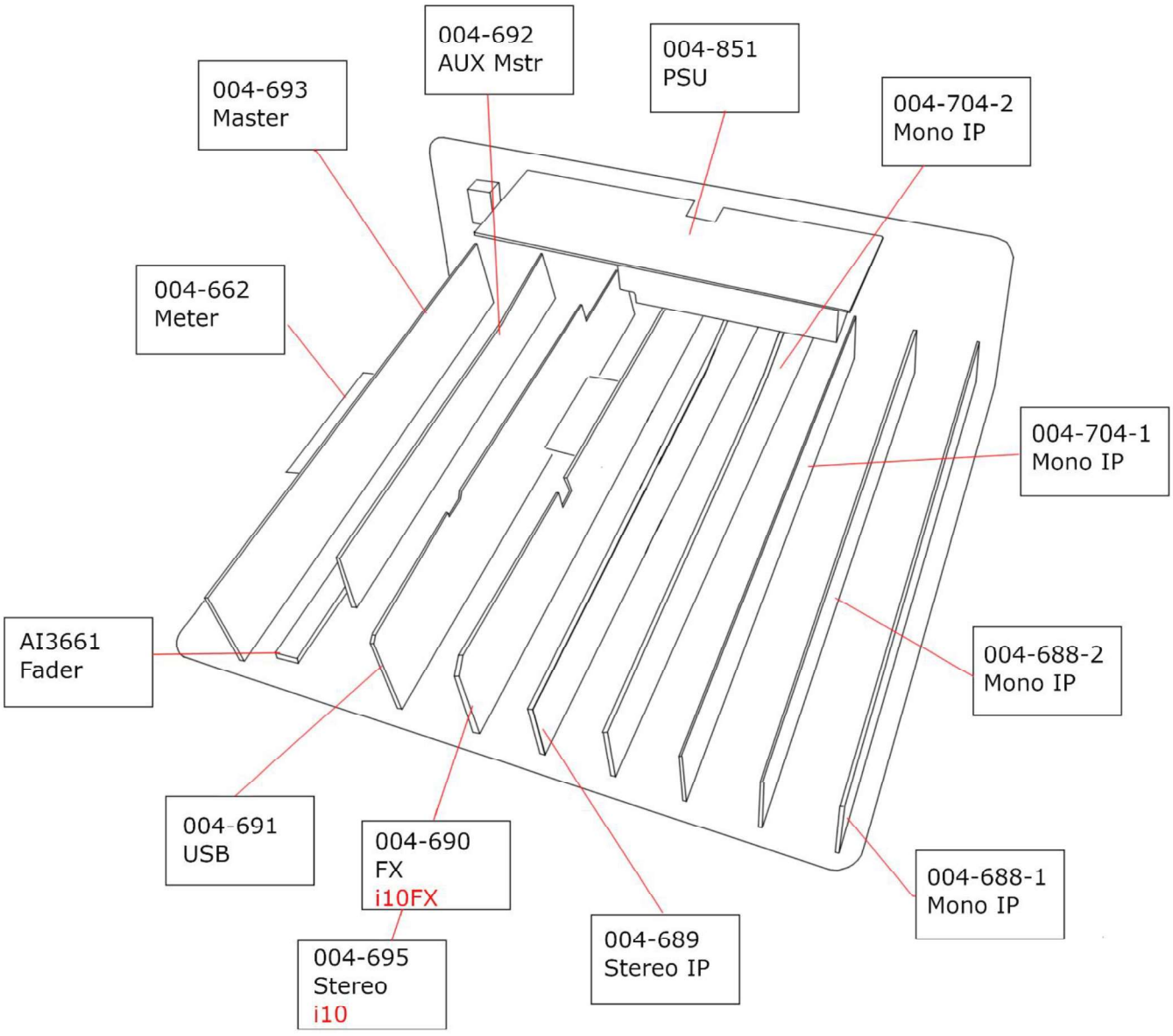

Circuit Board Identification

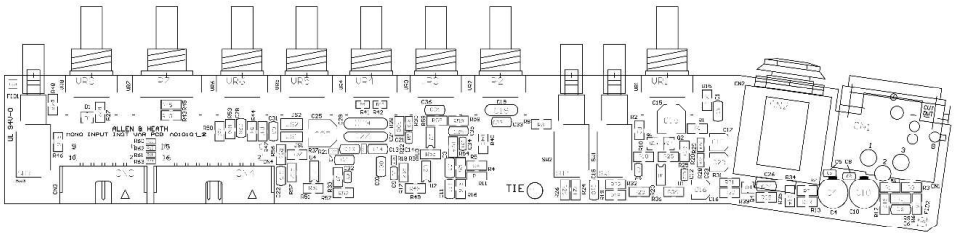

004-688-1/004-688-2 PCBA ZI-10 MONO I/P #1 IN/ #2 IN

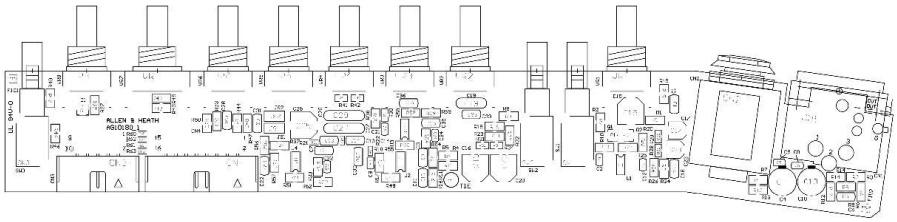

004-704-1 & **004-704-2** PCBA ZI-10 MONO I/P #1 LI/ P #2 LI

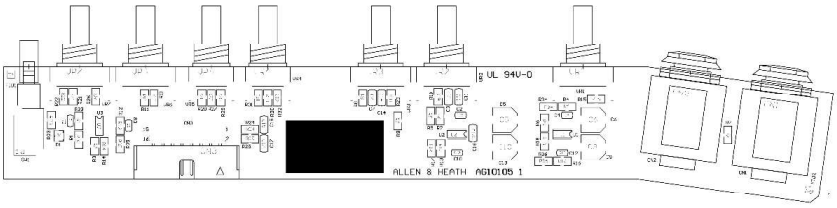

004-689 PCBA ZI-10 STEREO INPUT

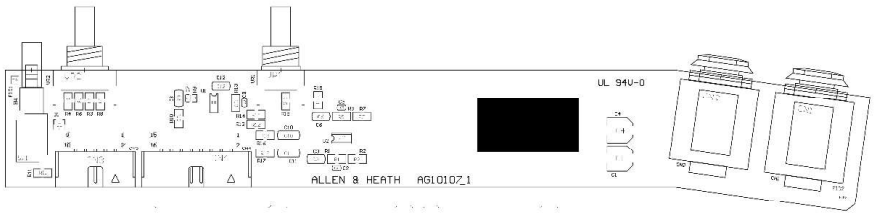

004-695 PCBA ZI-10 RETURN

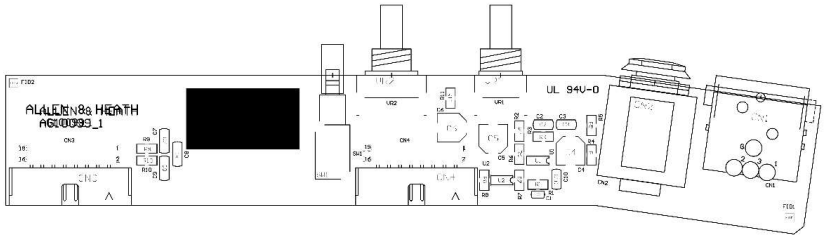

004-692 PCBA ZI-10 AUX MASTER

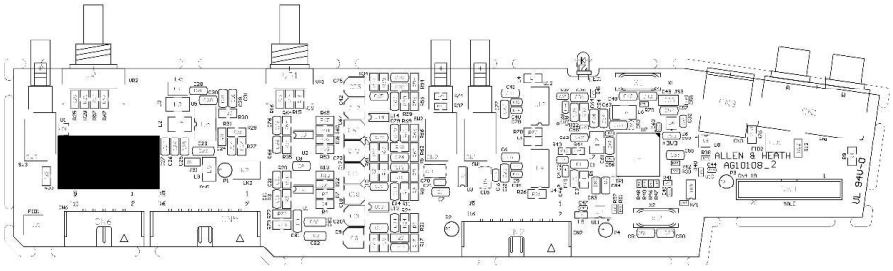

004-691 PCBA ZI-10 USB

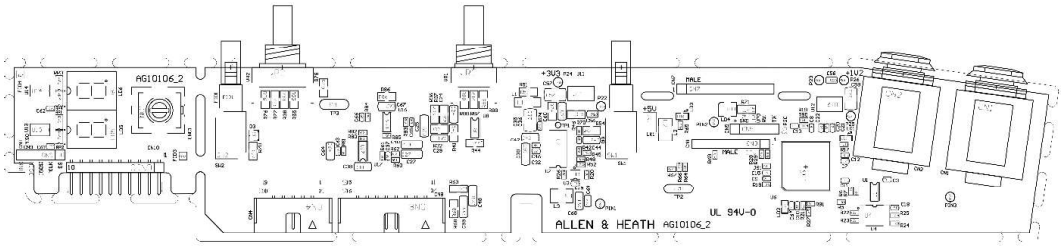

004-690 PCBA ZI-10FX EFFECTS

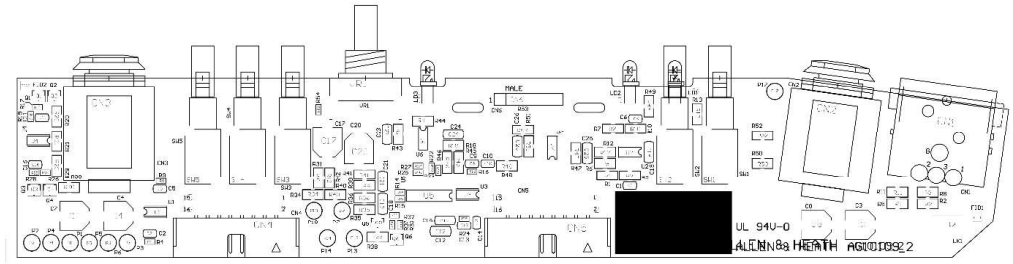

004-693 PCBA ZI-10 MASTER

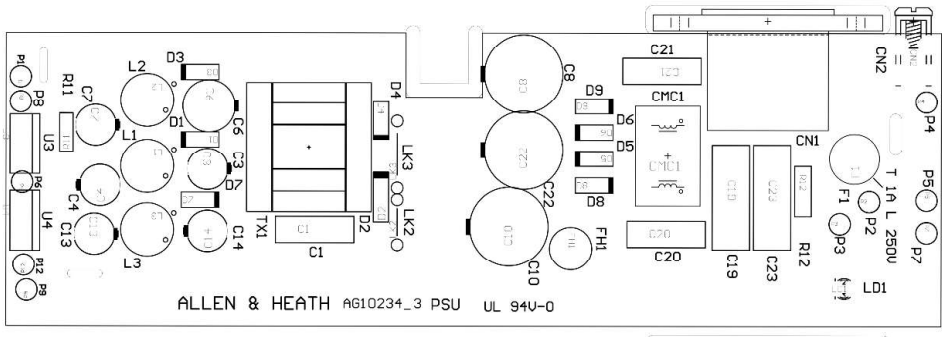

004-851 PCBA ZI-10 PSU V2 (2OZ CU

Servicing Information

Hot Melt Glue

Some connectors and wireforms/harnesses may be held in place with hot melt glue. You will need 99% Isopropyl Alcohol (propan-2-ol) to remove it. Follow these steps:

- Apply a small amount of 99% Isopropyl Alcohol to a swab and apply it to the edges of the glue
- Leave it for 20 seconds and then pick off the glue by hand or by using a tool that is of low risk to cause damage. Do not use excessive force. If the glue does not come off re-apply the Isopropyl Alcohol.
- Once the glue is removed from the connector release the wireform.
- Once the service/repair is complete re-apply the hot melt glue to secure the wireform in place.

Jumper Assignments

Mono PCB **004-688-1, 004-688-2, 004-704-1 & 004-704-2**
JS1 – M1-M2-M3-M4 USB Record send pre-EQ (Tracked default)
JS2 – M1-M2-M3-M4 USB Record send post-EQ

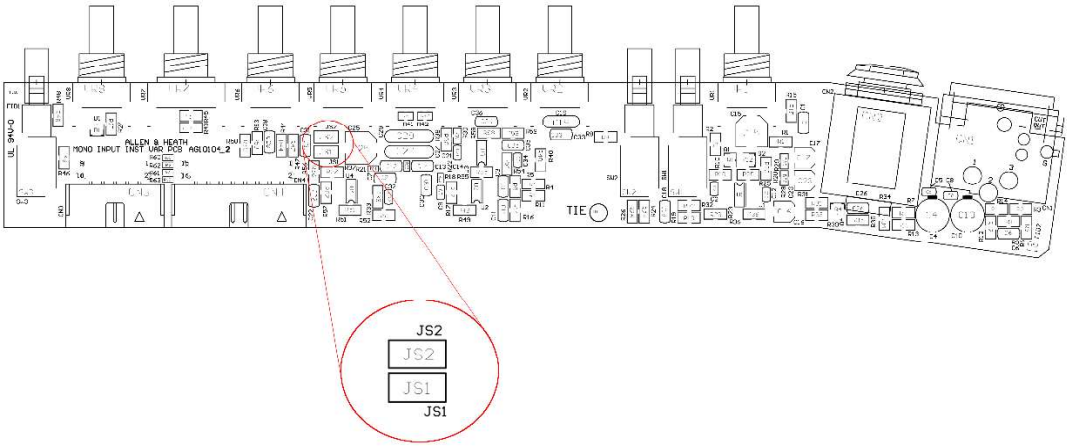

RECN5204A 004-851 PSU V2 Component value changes

Noise can be generated acoustically by the transformer when irregular switching occurs.

004-851 PCBA ZI-10 PSU V2 (2OZ CU) (AG10234_5) schematic up-issued to Issue_5.2
Component value changes to prevent irregular switching, which in turn prevents acoustic transformer noise. Plus, AM10085 'dipping' process extended to 2 minutes.

Details Of Change	
Change C5 & C12 from AF4696 CAP SMD 330PF 0805 50V CER 885012007060 * (WURTH)	**to AF9348 CAP SMD 150PF 0805 200V COG (AVX).**
Change R2 & R4 from AC5599 RES SMD 22R 1% 1206 (ANY)	**to AC3561 RES SMD 68R 5% 1206 (ANY)**
Change C24 from AF2851 CAP SMD 100NF 0805 50V CER (WURTH)	**to AF4701 CAP SMD 220NF 0805 50V CER CL21B224KBFNNNE (SAMSUNG).**
Change ZD1 from AE10181 DIODE SMD ZENER MMSZ4701T1G 14V 0.5W(ONSEMI)	**to AE10308 DIODE SMD ZENER MMSSZ4700T1G 13V .5W SO-123 (ONSEMI).**
Change R6 from AC4104 RES SMD 270R 5% 0805 (ANY)	**to AC3034 RES SMD 470R 5% 0805 (ANY)**

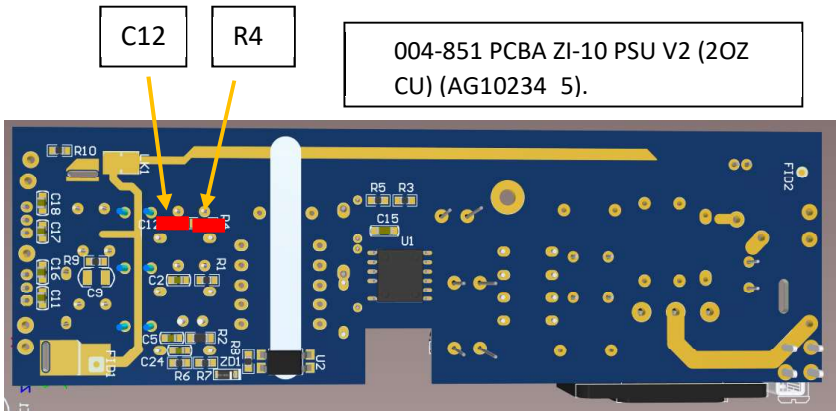

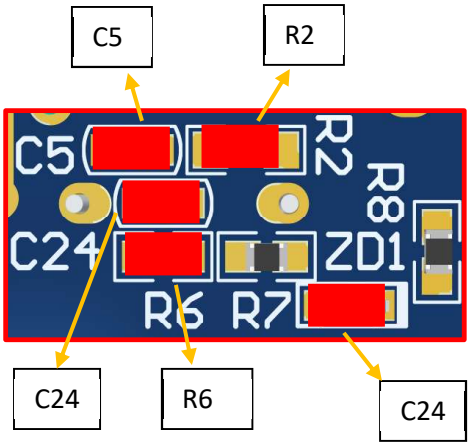

Note: Change is immediately implemented for future builds effective since 31/01/2023

Spares : All 004-851X will have RECN5204A implemented from 31st January 2023.

PSU Circuit Diagram

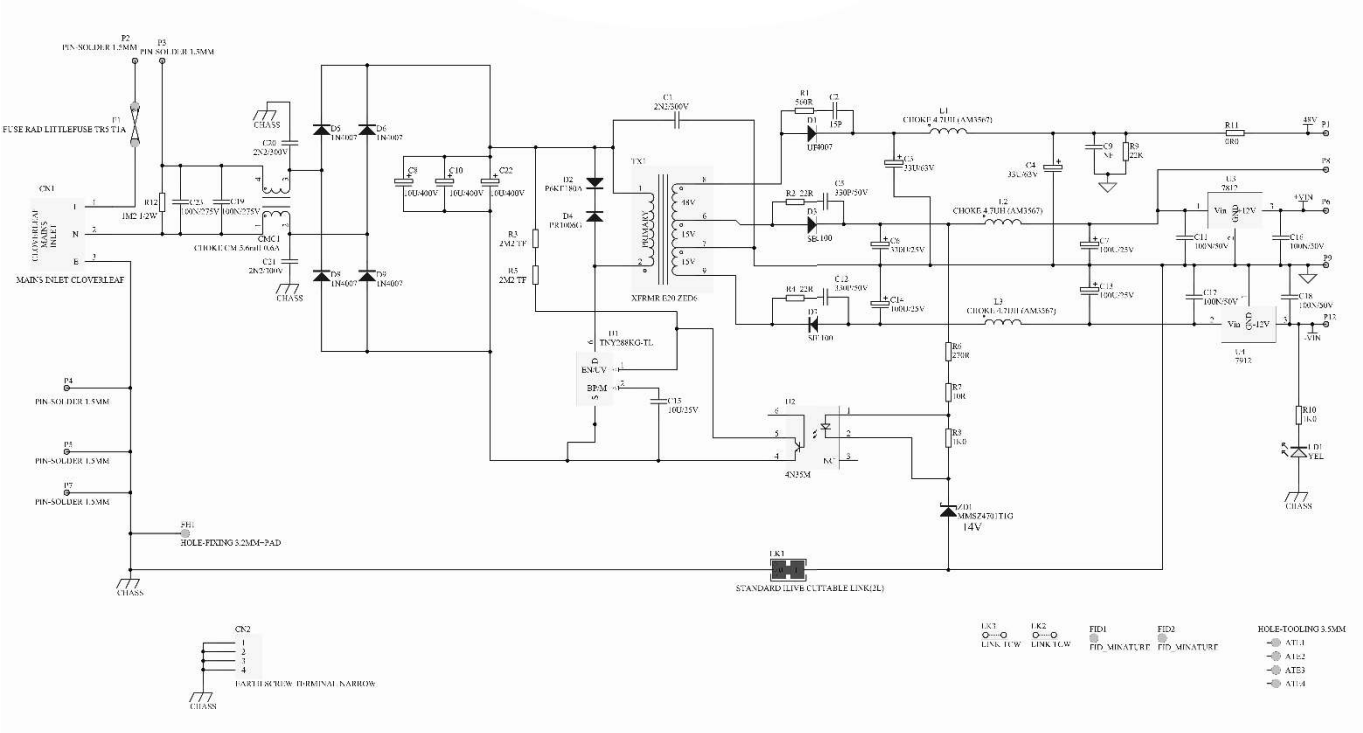

For the full PDF of this circuit including overlay, please download a copy from the A&H resource space. You will need your distributor/partner login to access the link below.
[Click here]

Other Technical Information

Block Diagram

Specifications

Weights & Dimensions

All of this information is available to end users and can be found at the following location.

https://www.allen-heath.com/hardware/zed-series/zedi-compact/zedi-10/resources/

https://www.allen-heath.com/hardware/zed-series/zedi-compact/zedi-10fx/resources/

For further information please contact Allen&Heath Product Support

https://support.allen-heath.com

support@allen-heath.com